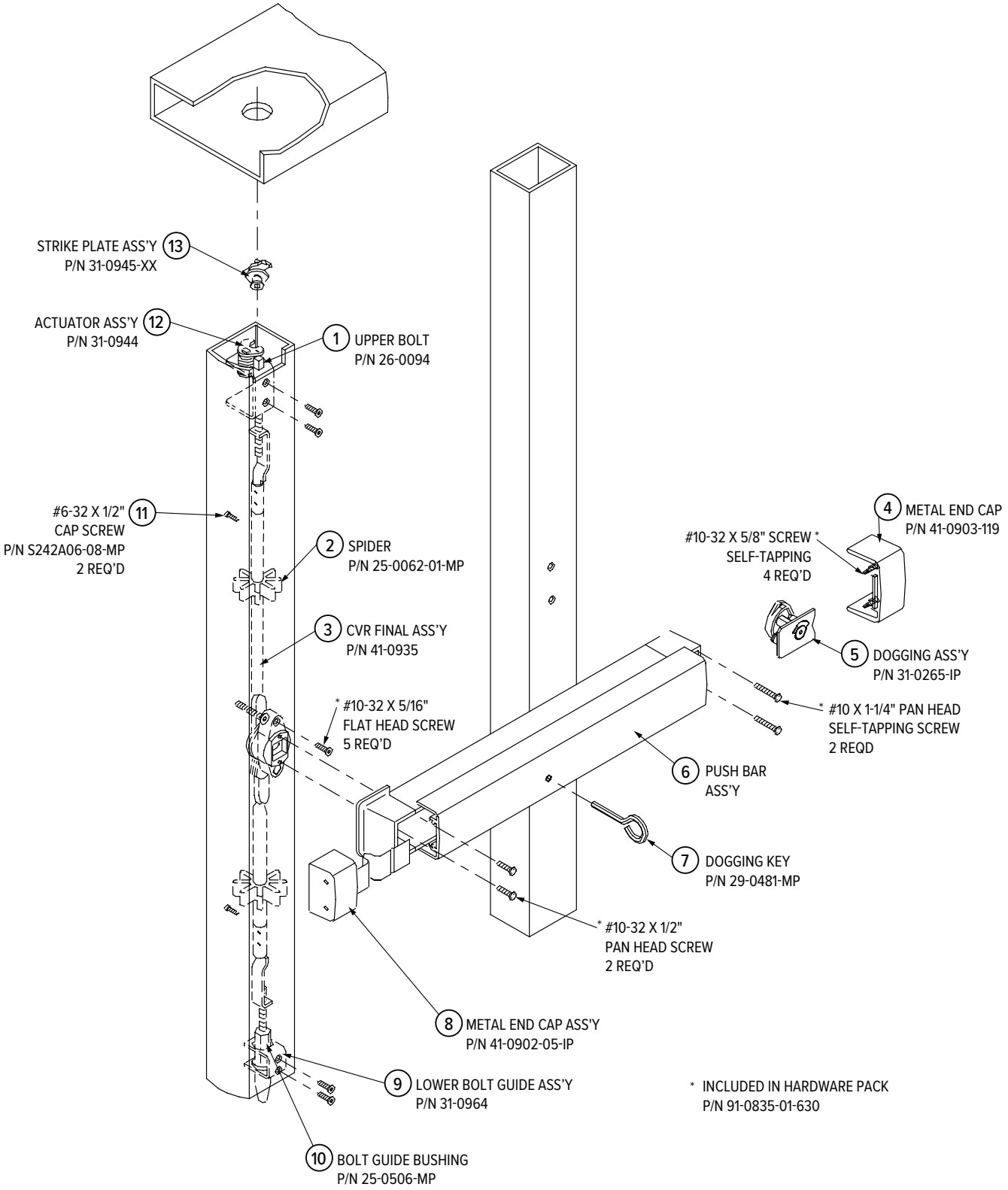8600 Series
CONCEALED VERTICAL ROD